Datasheet Rev 1.7

VINS | VINS-OEM

Visual-Aided Inertial Navigation System

Integrated solution combining Inertial Navigation System (INS), Attitude and Heading Reference System (AHRS), magnetometer, and Machine Vision to deliver high accuracy navigation and attitude solution in GNSS-denied environment.

Product Overview

Visual-Aided Inertial Navigation Solution (VINS) combine inertial navigation with advanced machine-vision algorithm to deliver precise position, velocity, and orientation for aerial platform in GNSS-denied environments.

Levering Inertial Labs' aiding data ecosystem, advanced sensor fusion filters, calibration software, and state-of-the-art navigation algorithm to maintain accurate orientation, attitude measurements, velocity estimates, and position in complete jamming environment.

Built as a self contain machine vision platform, VINS enables rapid integration and significantly reduce integration time and time-to-market for product requiring robust real-time navigation and sensor fusion system.

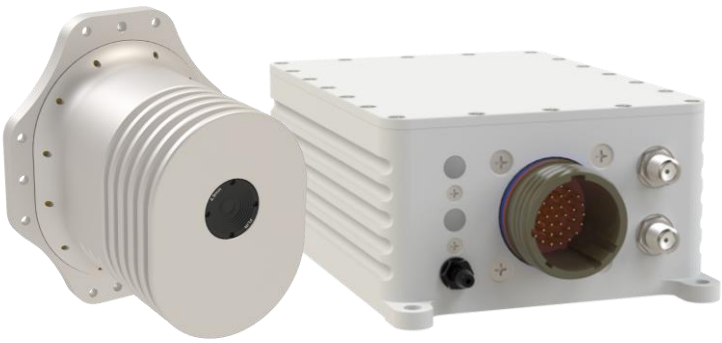

Key Features

- Machine Vision Algorithm:
  - Visual Odometry (VIO)
  - Visual Positioning (VPS)
- Fully calibrated tactical-grade MEMS accel and gyros
- Full-constellation GNSS receiver (GPS/ QZSS/ GLO/ GAL/ BDS/ NavIC)
- Ruggedized enclosure with IP67 and MIL-STD-810G rating[1]
- Embedded barometric altimeter
- Embedded in-flight magnetometers and ADC calibration

Key Benefits

- Complete GNSS-independent Position, Navigation, and Time (PNT) system
- Bounded Position/ Velocity/ Orientation estimates in GNSS denied environment.
- Expandable sensor fusion with external aiding data sources
- Modular and compact solution for small carrier aircraft integration

1. Contact Inertial Labs Sales for MIL-STD-810G qualification test reports (Vibration & Functional Shock).

System Architecture

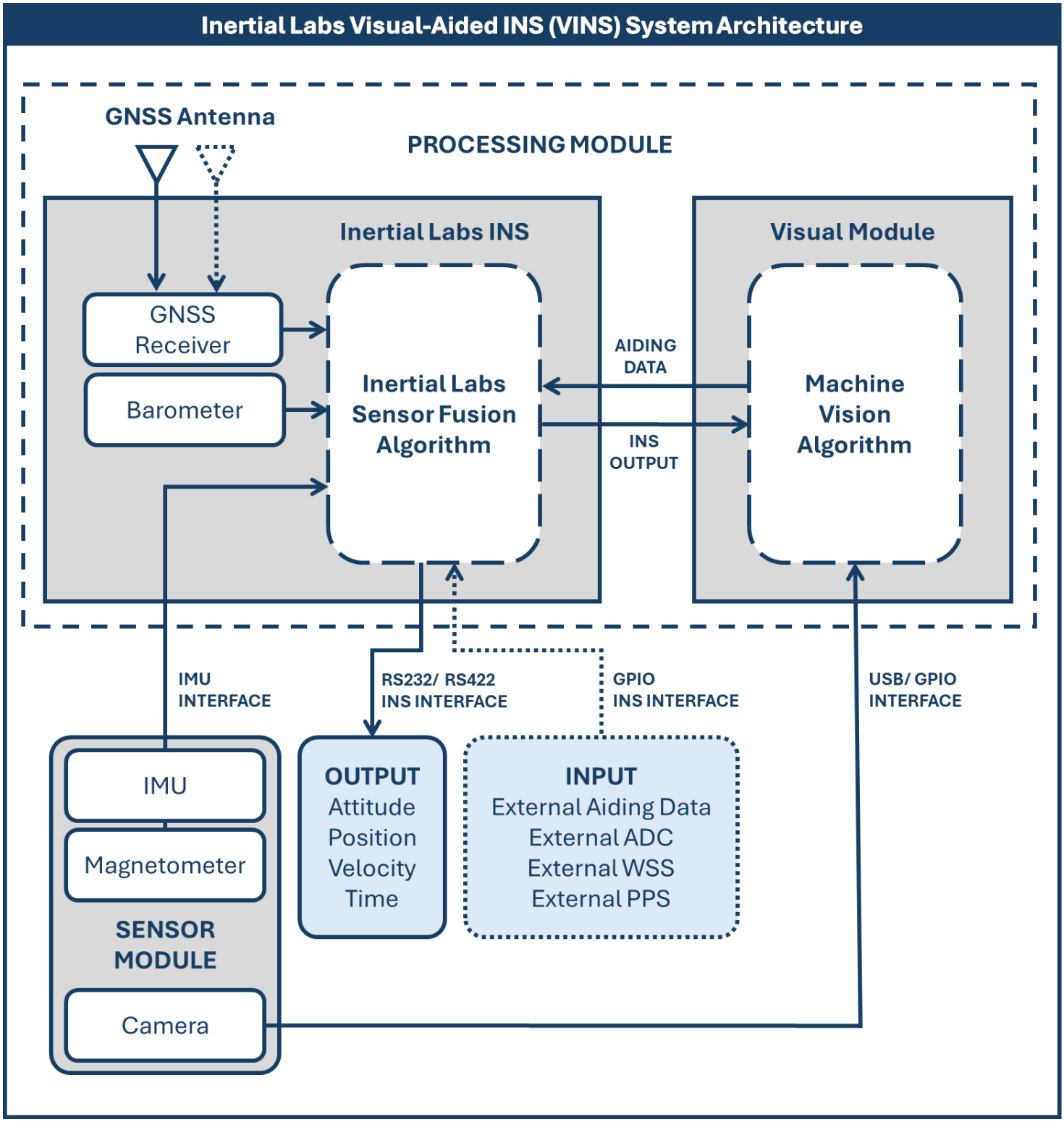

1. Dotted boarders represent optional components.

IMU

Gyroscopes			
Measurement Range (°/s)	±2000		
Bias in-run Stability[2] (°/hr)	2		
Bias Instability[3] (°/hr, RMS)	72		
SF Accuracy[3] (ppm)	1000		
Noise (ARW)[4] (°/√hr)	0.38		
Accelerometers			
Measurement Range (g)	±8	±15	±40
Bias in-run Stability[2] (mg)	0.01	0.03	0.05
SF Accuracy[3] (ppm)	500	700	850
Bias instability[3] (mg, RMS)	0.7	1.1	1.5
Noise (VRW)[5] (m/s/√hr)	0.02	0.045	0.06
Magnetometers			
Measurement Range (nT)	±800,000		
Bias in-run Stability[2] (nT)	0.8		
PSD (nT/√Hz)	1.5		
SF Accuracy (%, 1σ)	0.05		

Performance

Attitude	GNSS Enabled	GNSS Denied
Range (Heading, Pitch, Roll) (°)	0-360, ±90, ±180	
Angular resolution (°)	0.01	
Heading (INS) (°)[7]	0.15	
Dual Antenna Heading (GNSS, 1m/2m baseline) (°)	0.15 / 0.08	
Heading Free Inertial (°/hr)	5	
Pitch/Roll (Static) (°)	0.08	
Pitch/Roll (INS) (°)	0.05	
Navigation		
Horizontal Position Error Est. (m, RMS)[8]	1/ 0.6/ 0.4 (SP/SBAS/DGPS)	<1% DT [1] (VIO) <20 RMS (VPS)
Vertical Position Error Est. (m, RMS)[8]	1	<5
Velocity Error Est. (m/s)	0.05	<0.9

GNSS Receiver

	u-Blox ZED-F9P	Septentrio Mosaic-X5	NovAtel - OEM719/7720
GNSS Constellations	GPS/QZSS, GLONASS, Galileo, BeiDou, NavIC		
GNSS Bands	**ZED-F9P-02B:** L1C/A, L2C, L1OF, L2OF, E1B/C, E5b, B1I, B2a	**Mosaic-X5:** L1C/A, L1C, L1PY, L2C, L2P, L3 L5, L6 B1I, B1C, B2a, B2I, B3, E1, E5a, E5b, E5, E6	**OEM719:** L1 C/A, L1C, L2C, L2P, L5, L3, L2 C/A, L2P, E1, E5a, E5b, B1I, B1C, B2I, B2a, B2b, L1S, L5
	ZED-F9P-15B: L1C/A, L2C, L1OF, E1B/C, E5a, B1I, B2a		**OEM7720:** L1 C/A, L1C, L2C, L2P, L5, L2 C/A, L3, B1I, B1C, B2I, B2a, B2b, E1, E5 AltBOC, E5a, E5b
GNSS Corrections	WAAS; EGNOS; MSAS; GAGAN; SBAS; DGPS; RTK	WAAS; EGNOS; MSAS; GAGAN; SBAS; DGPS; RTK	TerraStar-L/C PRO, RTK, DGPS, SBAS, ALIGN, GLIDE, SPAN, GRIT
GNSS Data Rate (Hz)	20	20	20
RTK Corrections	RTCM 3	RTCM 2, RTCM 3	RTCM 2, RTCM 3, CMR, CMR+
Initialization Time (s)	<30/ <10 (cold/ hot start)	<45/ <20 (cold/ hot start)	<34/ <20 (cold/ hot start)
Time Accuracy (ns)[6]	30	20	5

1. %DT: percentage of distance travel.
2. Allan Variance, 12-hour measurement.
3. In the temperature range.
4. Angular Random Walk
5. Velocity Random Walk
6. Time accuracy does not include biases due to RF or antenna delay
7. Fused INS Heading Accuracy (Single Antenna GNSS)
8. Root Mean Square (RMS)

Processing Module General

Environmental	Encased	OEM
Operating Altitude (m)	up to 15000	
Operating temperature (°C)	-40 to +70	
Storage temperature (°C)	-40 to +85	
Environmental Protection[11]	MIL-STD-810G	
	IP67	NR
Electrical		
Supply Voltage (VDC)	9-36	
PM+SM+ADC Power Consumption (W)[1]	<10.8[2]	
1 PPS Level (VDC)	3.3/ 5/ Differential	
Physical[3]		
Dimensions (LxWxH) (mm)	134x 80x 45	116x 80x 42
Weight (g)	430	250
Interfacing		
Output Interface	RS-232/RS-422/CAN/ Ethernet	
Output Data Rate (INS) (Hz)	up to 200	
Output Data Format	Binary, NMEA 0183 ASCII characters	
Data Inputs[4]	Aiding data External sensors	

VINS Operating Requirement

Flight Requirements	
VIO Operating Altitude (AGL, m)	150-10000[5]
VPS Operating Altitude (AGL, m)	200-10000[5]
Maximum Velocity at 0.2/ 1/ 2 km AGL Altitude (m/s)	90/ 400/ No-Limit
Maps Requirements	
VPS Maps Resolution at 0.2/ 1/ 2 km AGL altitude (m/pixels)	1/ 1.5/ 2

Sensor Module General

Imagery	Monochrome[6]		Infrared[7]	
	Encased	OEM	Encased	OEM
Spectrum	Visible Spectrum		Infrared (LWIR)	
Resolution (pixel)	2048x1536[8]		640x512	
Horizontal FOV (°)	83		95	
Vertical FOV (°)	67		82	
Frame Rate[9]	55		60	
Environmental				
Operating Altitude (m)	up to 15000			
Operating temp (°C)	-40 to +70			
Storage temp (°C)	-40 to +85			
Environmental Protection[11]	MIL-STD-810G			
Electrical				
Supply Voltage (VDC)	9-36			
SM Power Consumption (W)[1]	<2		<2	
Physical[2]				
Dimensions (LxWxH) (mm)	88x 80x 100	63x 49x 68	83x 80x 100	56x 49x 62
Weight (g)	430	170	330	80
Interfacing				
Output Interface	RS-422/ USB			
Output Data Rate (IMU) (Hz)	up to 2000			
Output Data Format	Inertial Labs IMU Binary/ Image via USB			

1. Power consumption varies depending on hardware configuration. Contact Inertial Labs for details on specific hardware configuration.
2. PM power consumption estimates is derived from operating PM paired with Infrared SM and External ADC.
3. Weight and size are PN dependent. Contact Inertial Labs to obtain the most recent 2D/3D files before designing any interface hardware.
4. Data input includes aiding data via INS-COM1/ external ADC/ Digital Wind Speed Sensor.
5.Device is validated up to 10km AGL altitude with camera in nadir configuration.
6. BFS-U3-31S4M-BD2 - FA 4mm Machine Vision 1/1.8" Fixed Focus Lens.
7. BOSON+ 640 X 512 4.9mm Short Lens 95° HFOV - LWIR.
8. VINS uses trimmed/ binned frame for machine vision algorithm: 2000x1500.
9.VINS uses 1-7 Hz frame update for machine vision algorithm. SM can only be operated at higher rate as standalone device.
10. NR is an abbreviation for Not Rated.
11. Contact Inertial Labs Sales for MIL-STD-810G qualification test reports (Vibration & Functional Shock).

Processing Module Mechanical Interface

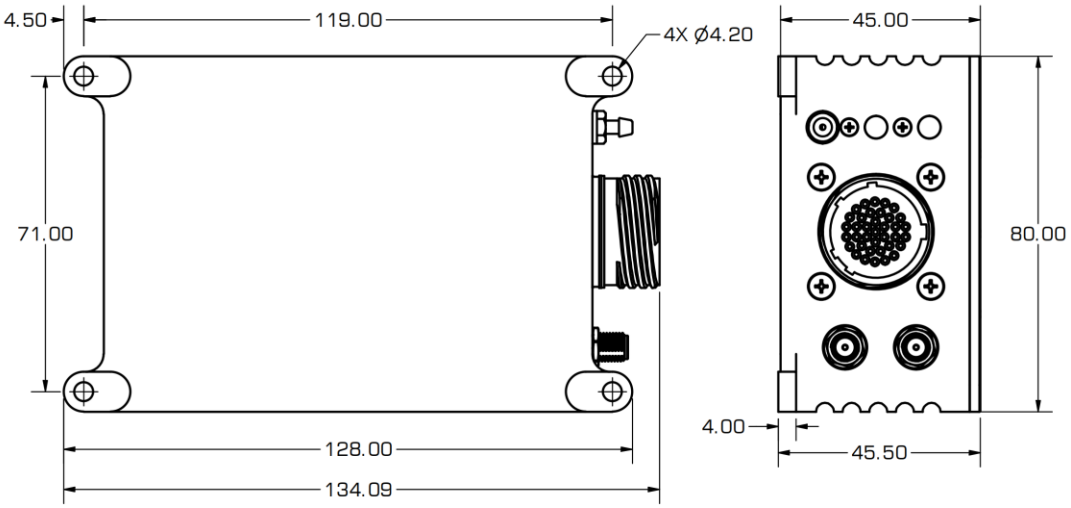

Figure 1: *Processing Module Drawing*[1]

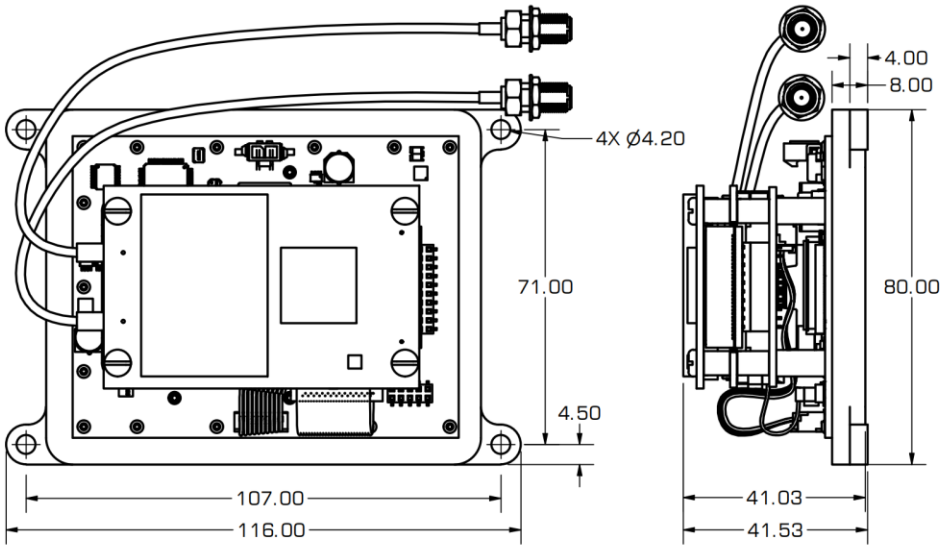

Figure 2: *Processing Module OEM Drawing*[1]

1. Weight and size are PN dependent. Contact Inertial Labs to obtain the most recent 2D/3D files before designing any interface hardware.
2. All measurements units are in millimeters (mm).

Monochrome Sensor Module Mechanical Interface

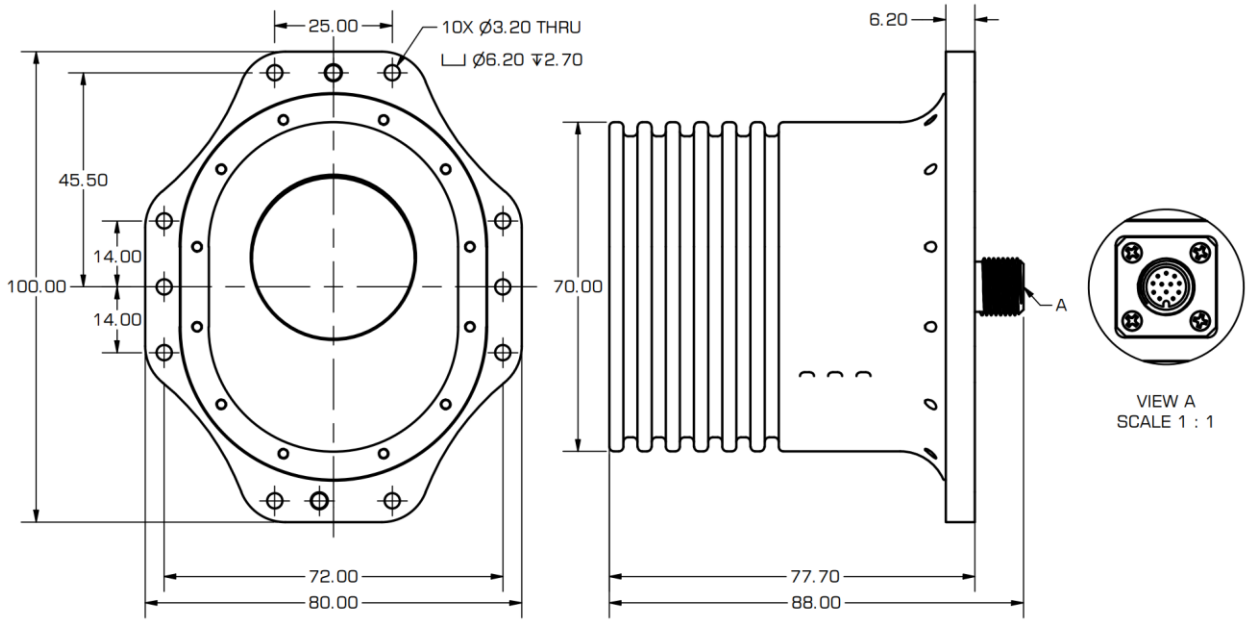

Figure 3: *Monochrome Sensor Module Drawing*[1]

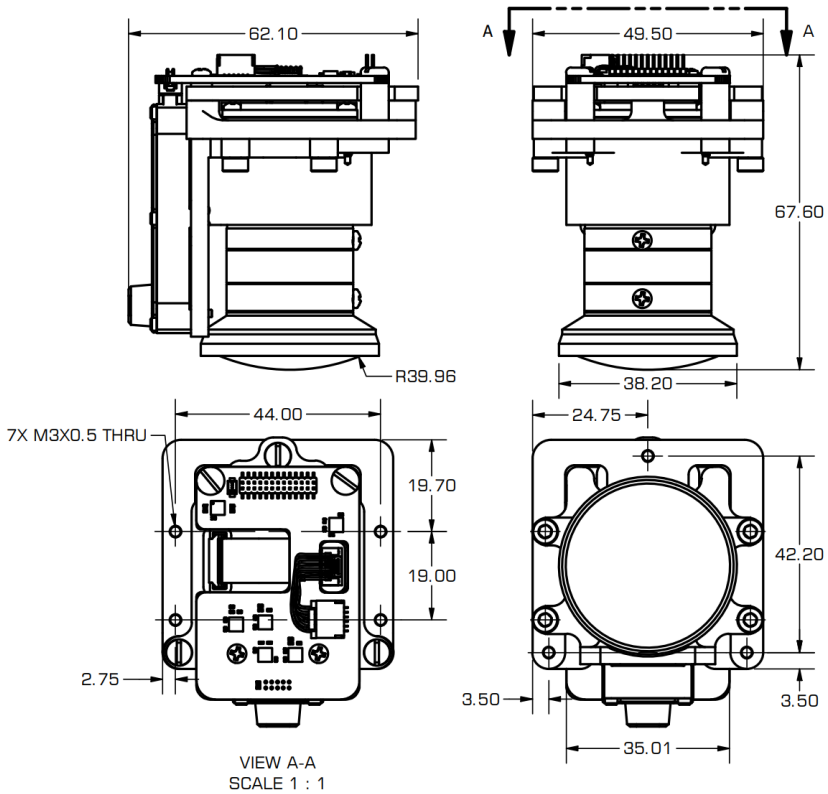

Figure 4: *Monochrome Sensor Module OEM Drawing*[1]

1. Weight and size are PN dependent. Contact Inertial Labs to obtain the most recent 2D/3D files before designing any interface hardware.
2. All measurements units are in millimeters (mm).

Infrared Sensor Module Mechanical Interface

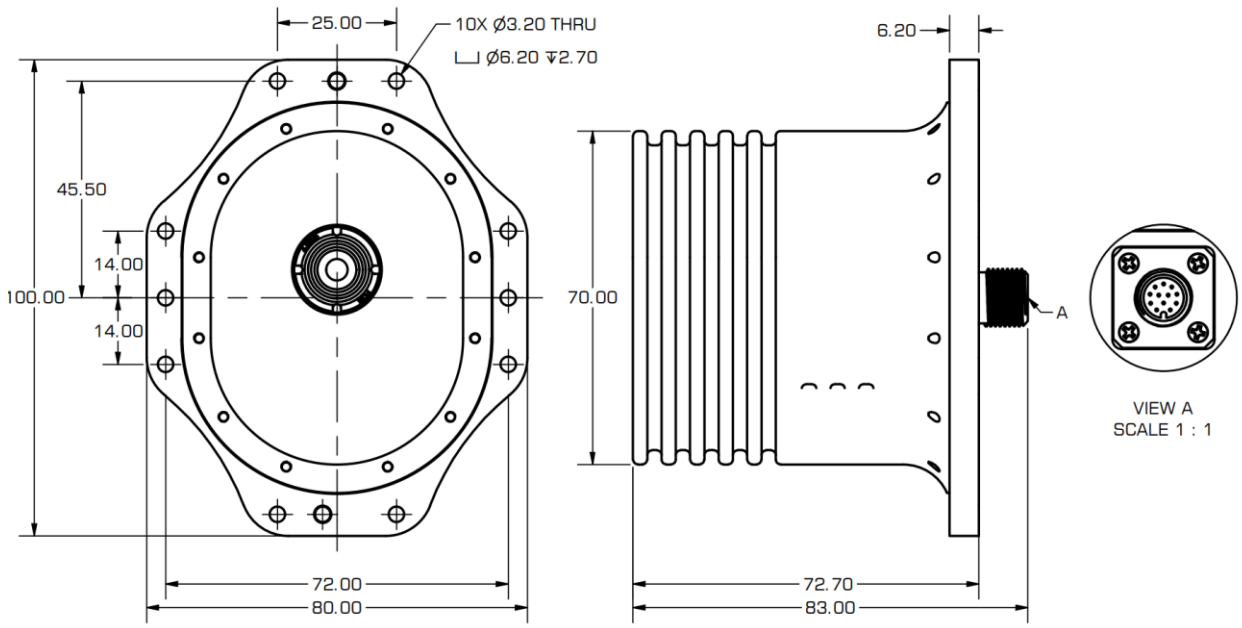

Figure 5: *IR Sensor Module Drawing*[1]

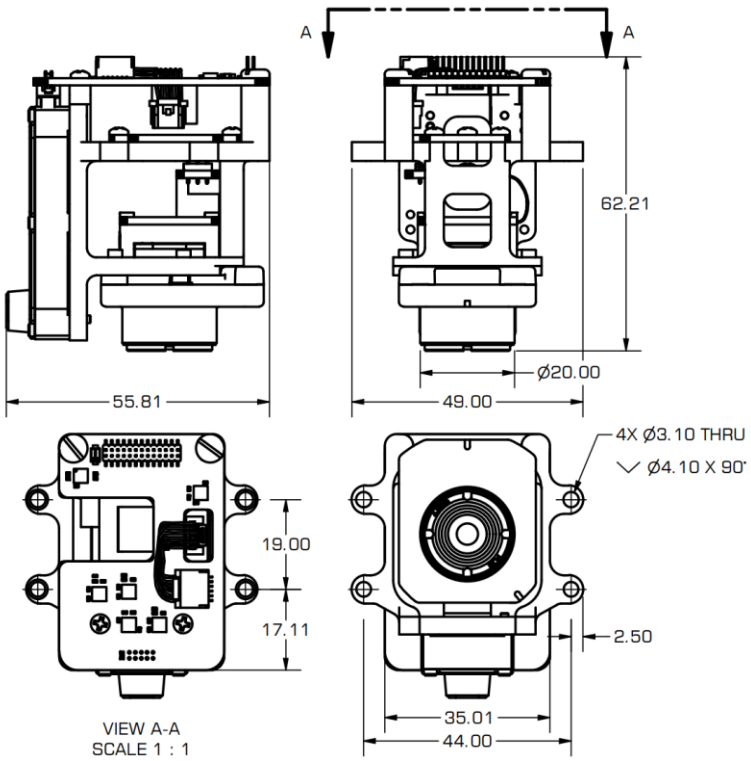

Figure 6: *IR Sensor Module OEM Drawing*[1]

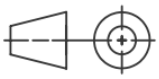

1. Weight and size are PN dependent. Contact Inertial Labs to obtain the most recent 2D/3D files before designing any interface hardware.
2. All measurements units are in millimeters (mm).

Product Code Structure

Model	Enclosure	Color	GNSS Receiver	Version	Interface
VINS-PM	C28	S	O7720	V9	.125
VINS-PM-OEM	C30		O719	VD9	
	C29		SMX5		
			ZF9P		
			ZD9P		

Example: VINS-PM-C28-S-O7720-VD9.125

Product code details:

VINS-PM: Encased Processing Unit
VINS-PM-OEM: Caseless Processing Unit (OEM)
C28: Ruggedized enclosure with 31-pin ruggedized connector
C30: Aluminum base plate with 50-pin connector
C29: C30 with interface board attached
S: Nickel-plated silver finish
O7720: NovAtel OEM7720 GNSS Receiver
O719: NovAtel OEM719 GNSS Receiver
SMX5: Septentrio Mosaic-X5 GNSS Receiver
ZF9P: Single u-blox ZED-F9P GNSS Receiver
ZD9P: Dual u-blox ZED-F9P GNSS Receiver
V9: Single Antenna GNSS Receiver
VD9: Dual Antenna GNSS Receiver
.125: RS-232, RS-422, Ethernet interfaces

Model	Gyro	Accel	Calibration	Enclosure	Color	Camera	Version	Interface
VINS-SM	G2000	A8	TMGA	C44	S	1R	V1	.29
VINS-SM-OEM		A15		C45		1D		
		A40						

Example: VINS-SM-G2000-A8-TMGA-C44-S-1R-V1.29

Product code details:

VINS-SM: Encased Camera Unit
VINS-SM-OEM: Caseless Camera Unit (OEM)
G2000: Gyro measurement range ±2000 deg/sec
A8: Accel measurement range ±8 g
A15: Accel measurement range ±15 g
A40: Accel measurement range ±40 g
TMGA: Calibration of IMU (gyroscopes, accelerometers, and magnetometers) in operational temperature range
C44: Ruggedized aluminum enclosure with 12-pin connector
C45: Aluminum base bracket with 26-pin connector
S: Nickel-plated silver finish
1R: Infrared camera (LWIR)
1D: Day camera (monochrome)
V1: Version 1
.29: RS-422 and USB interfaces

1. Product configuration is flexible. Contact Inertial Labs to check compatibility or discuss other desired options.